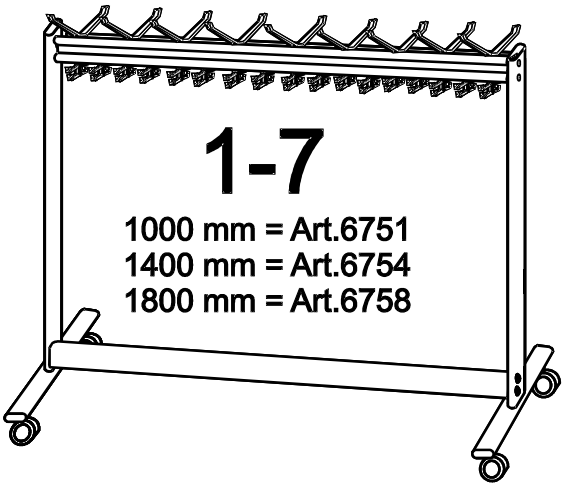
1-7
1000 mm = Art.6751
1400 mm = Art.6754
1800 mm = Art.6758

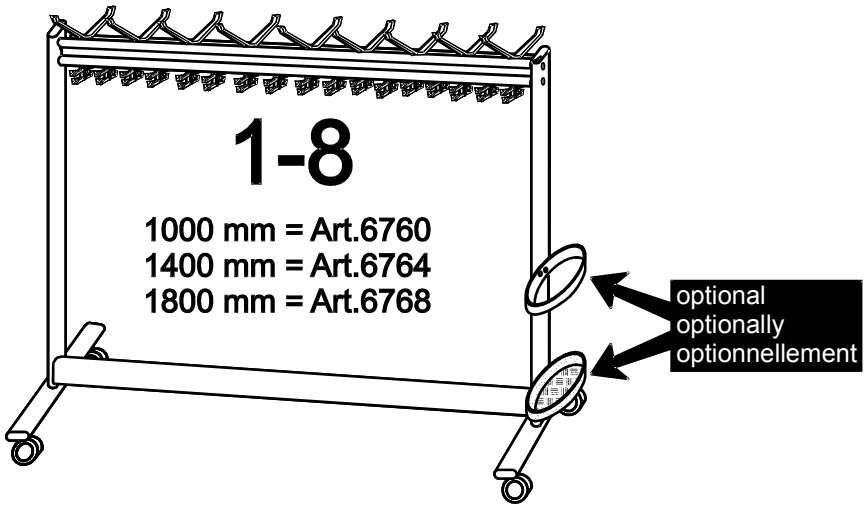
1-8
1000 mm = Art.6760
1400 mm = Art.6764
1800 mm = Art.6768
optional
optionally
optionnellement

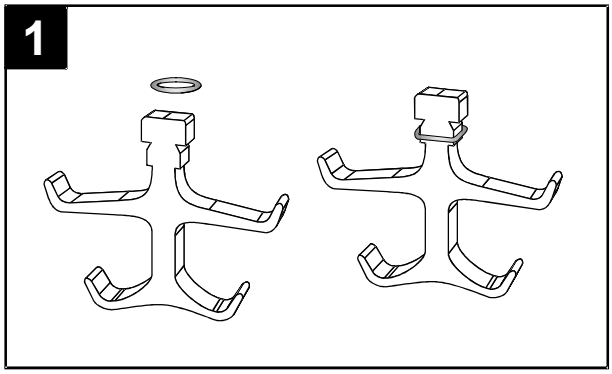
1

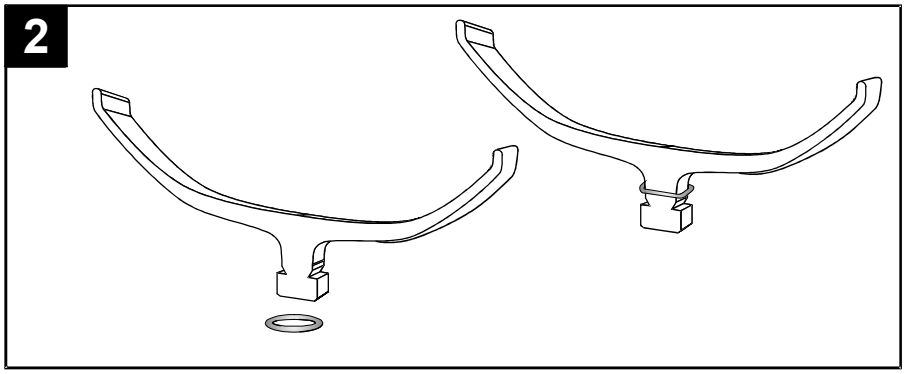
2

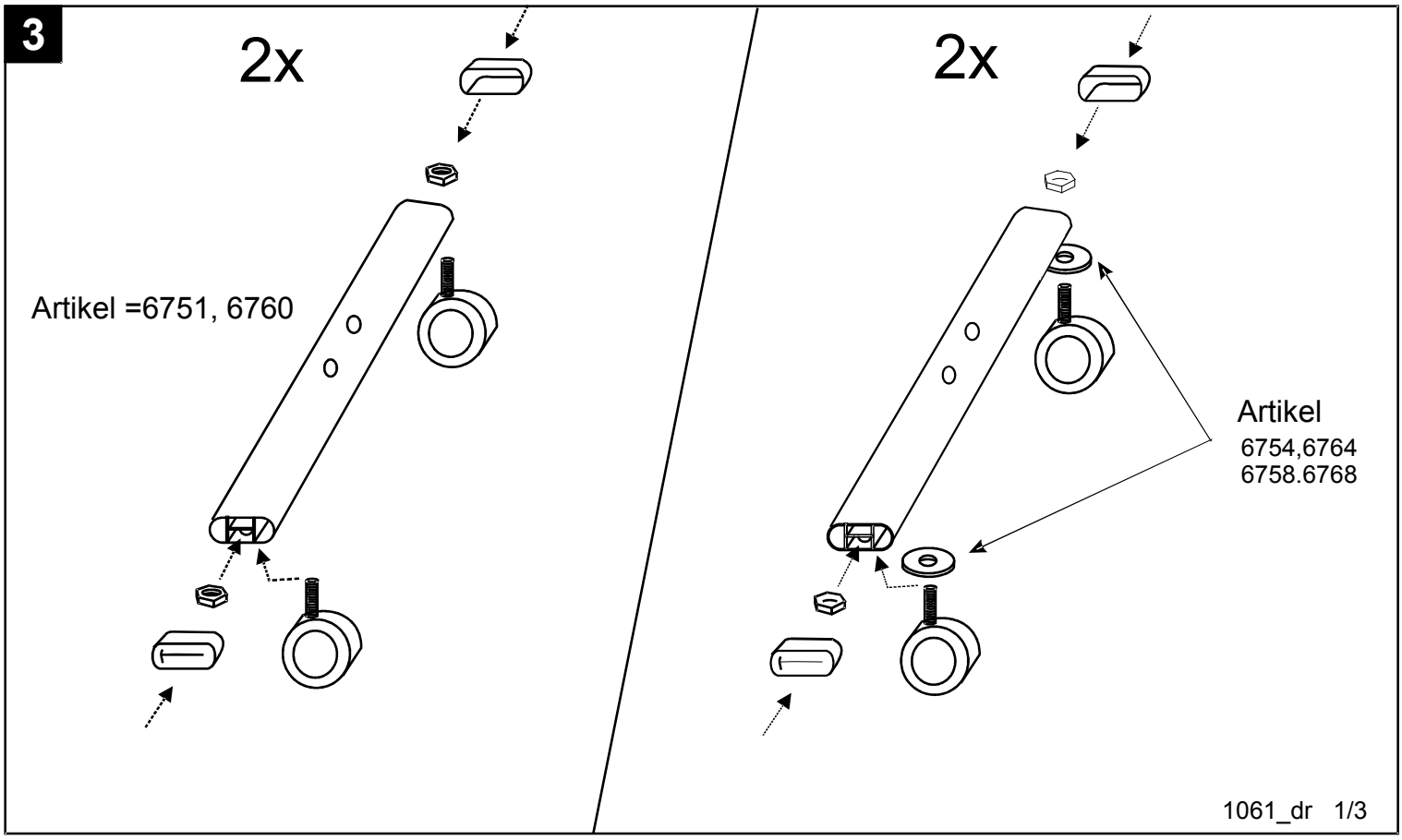
3
2x
Artikel =6751, 6760
2x
Artikel
6754,6764
6758.6768

4

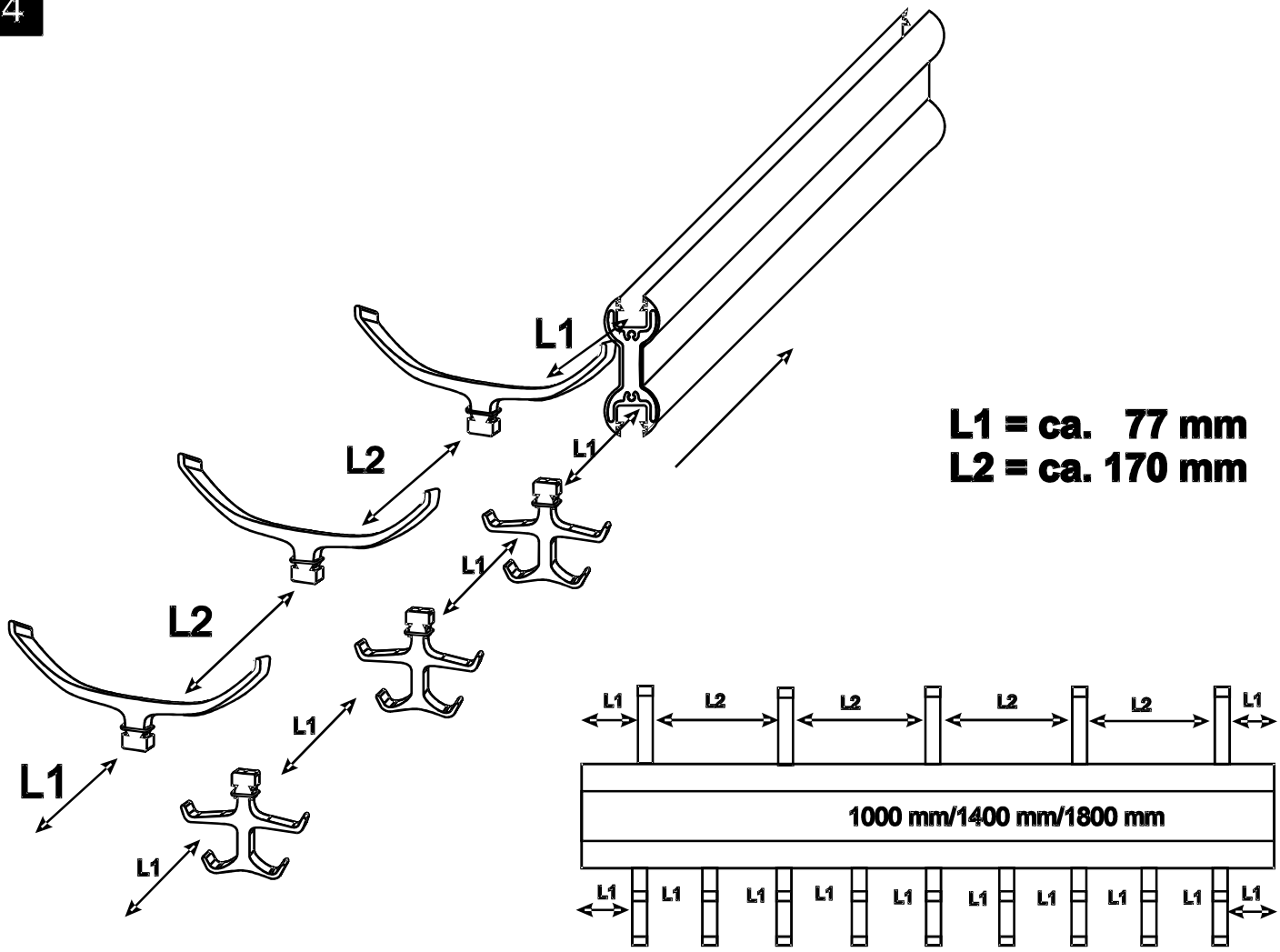
L1
L2
L1
L2
L1
L1
L1
L1
L1 = ca. 77 mm
L2 = ca. 170 mm
L1
L2
L2
L2
L2
L1
1000 mm/1400 mm/1800 mm
L1
L1
L1
L1
L1
L1
L1
L1
L1
L1

5 2x

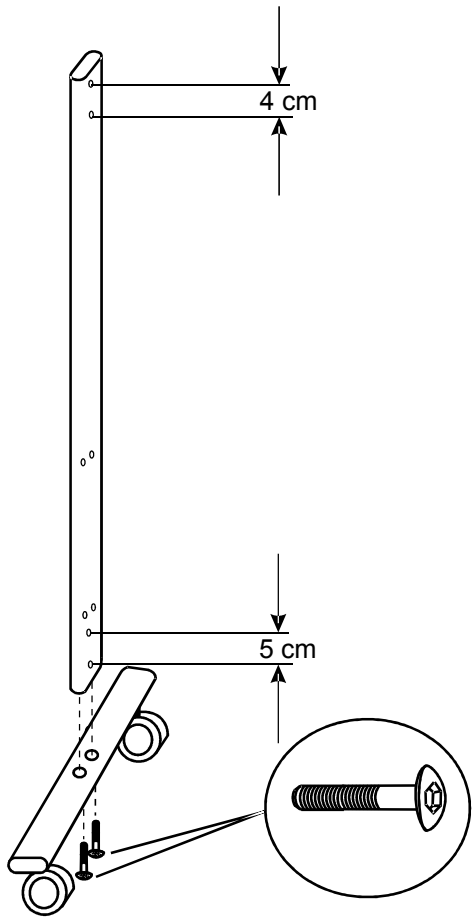
4 cm
5 cm

6

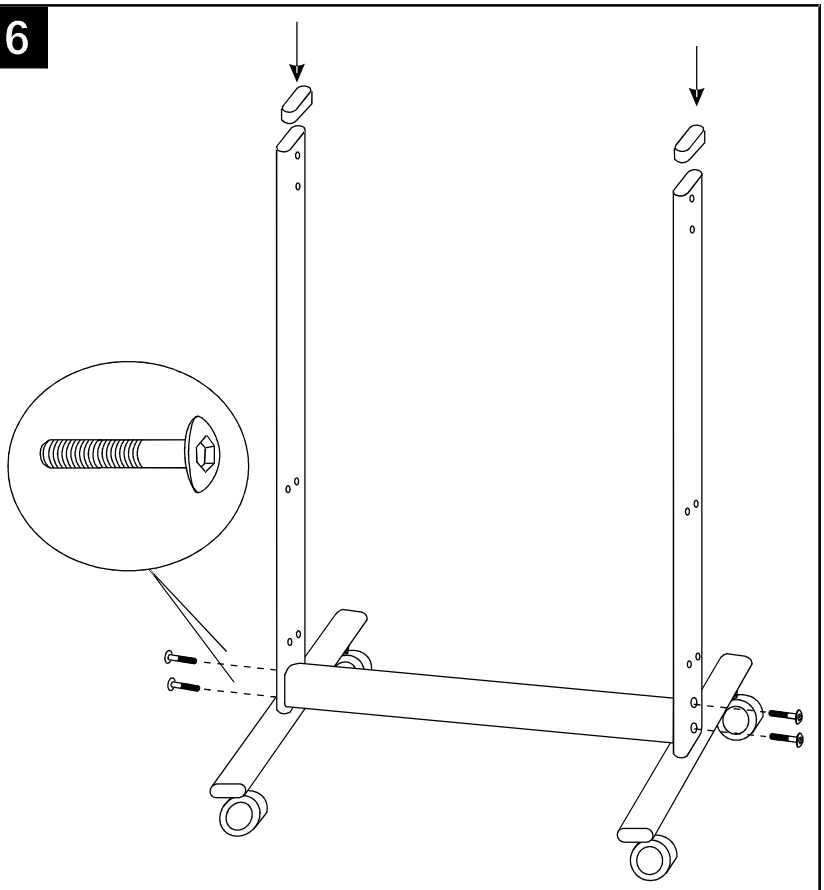

7

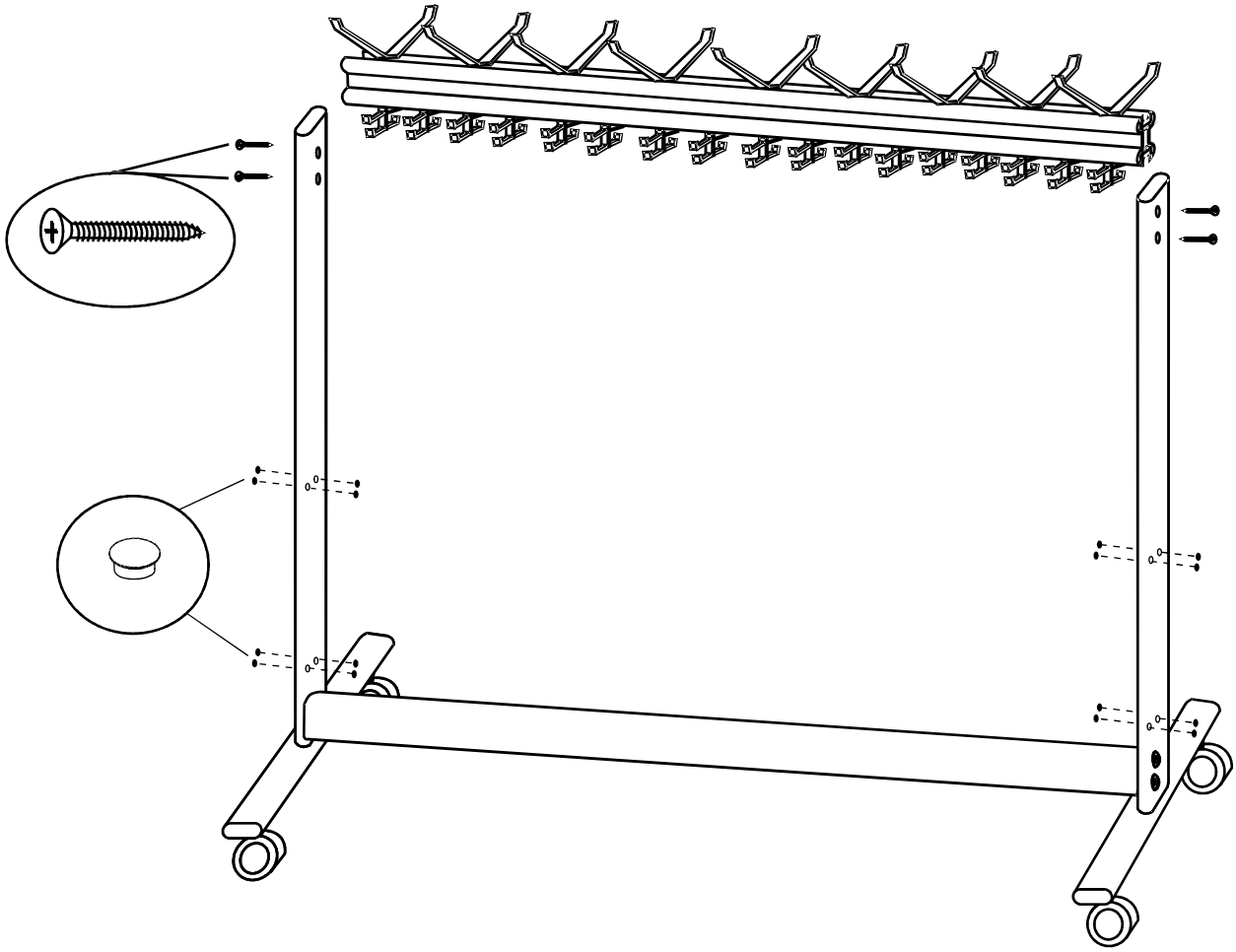
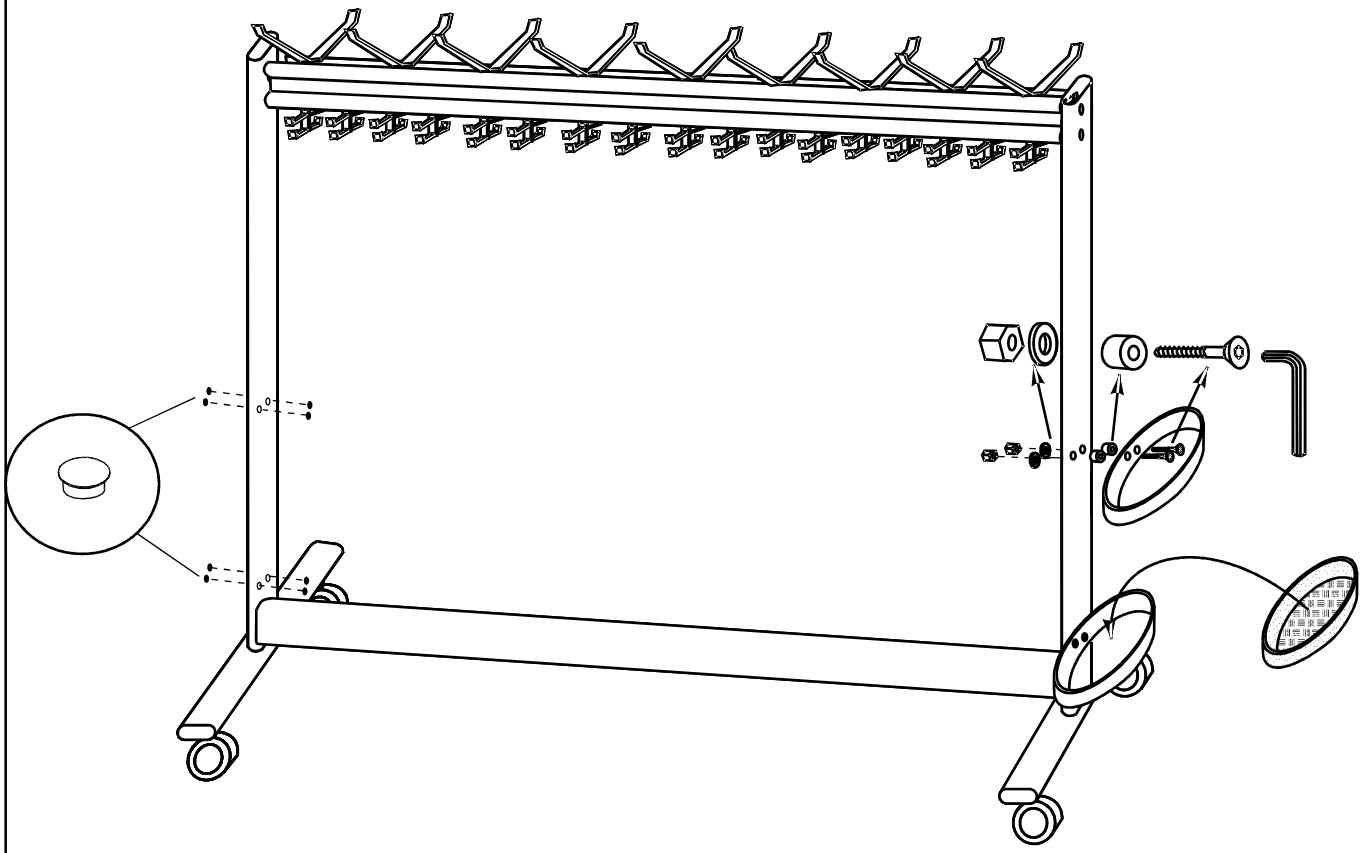
8