MONTAGEINFORMATIONEN

ASSEMBLY INSTRUCTIONS

MONTAGE-INFORMATIE

D

GB

NL

094

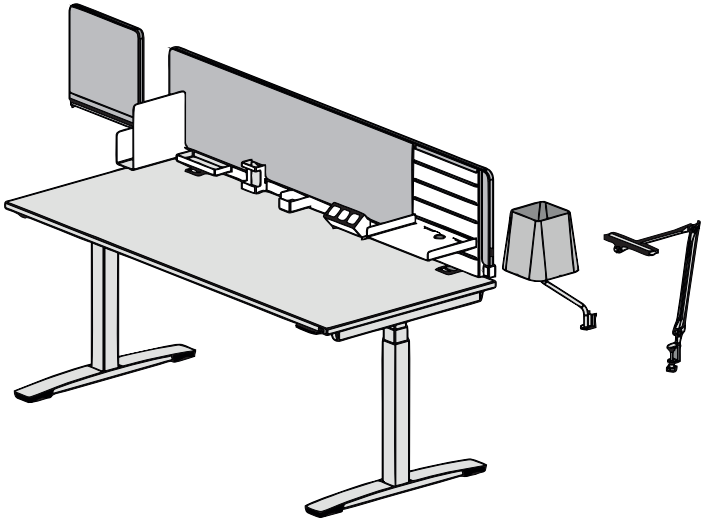

DeskTop Montage und Modulanbindung Screen DeskTop

DeskTop Sampling and Module connection on Screen DeskTop

DeskTop montage en Moduleverbinding met de Screen DeskTop

Stand/Version/Versie: 11/2021

Montage Screen DeskTOP

1 Screen DeskTOP DL1

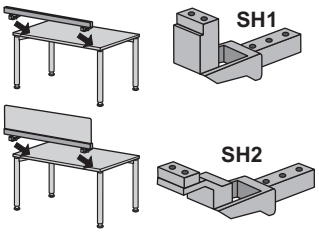

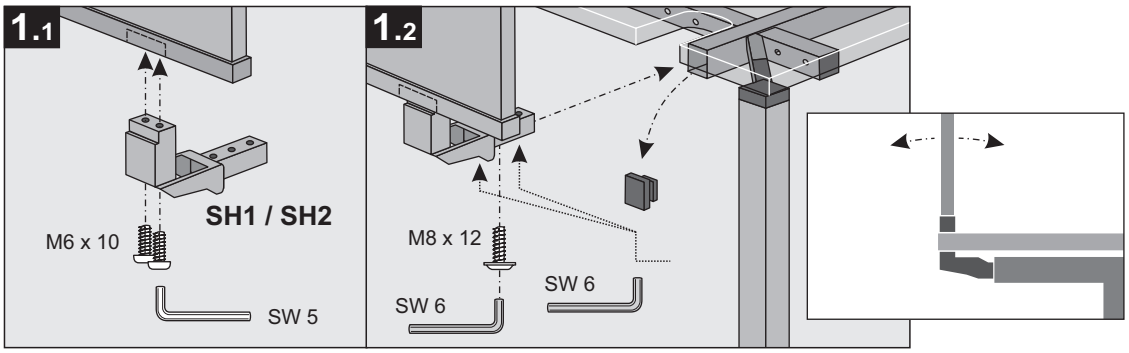

2 Screen DeskTOP DL7/DL8/DL9/DL10

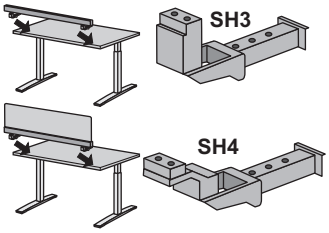

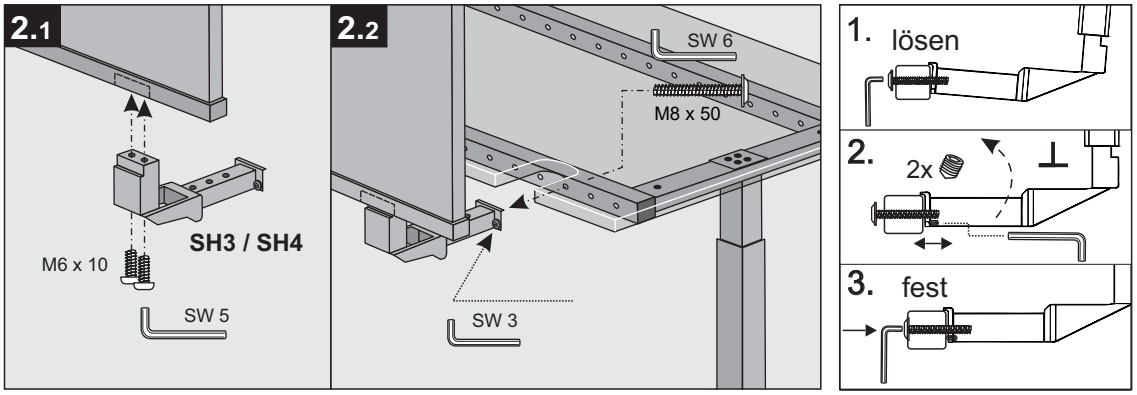

3 Screen DeskTOP DL7/DL8/DL9/DL10

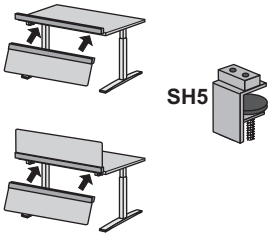

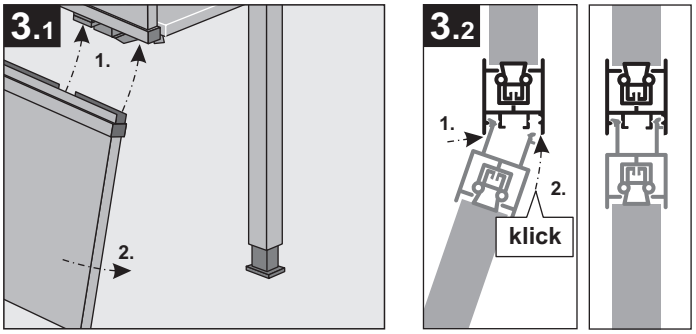

4 Screen DeskTOP DL1/DL7/DL8/DL9/DL10

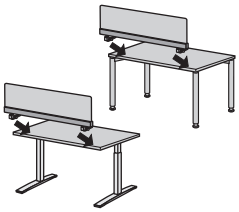

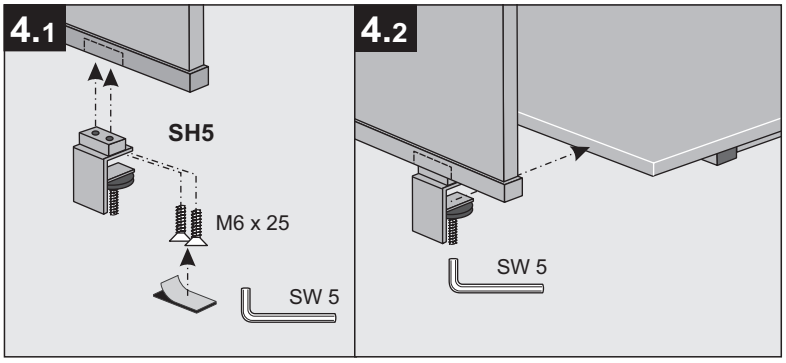

5 DeskTop-Flex / Abdeckband für Reling

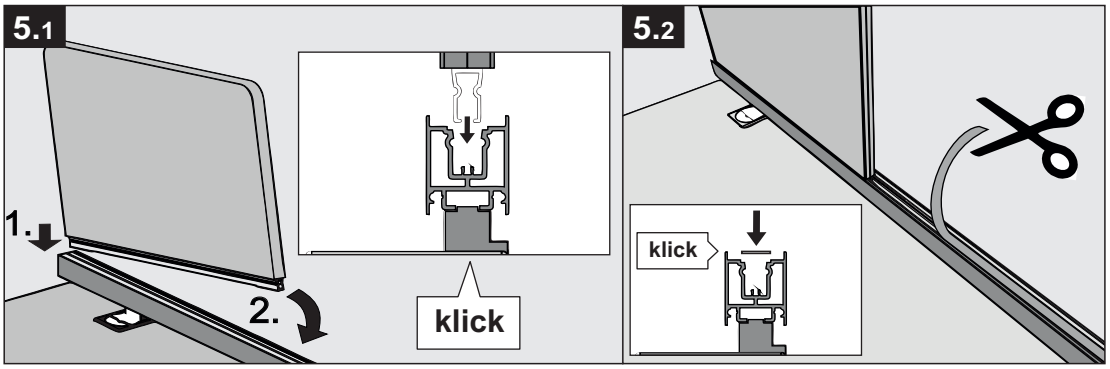

Montage Module DeskTOP

6 Orga-Blech

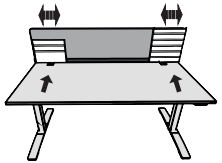

7 NETBOX-Smart für Reling

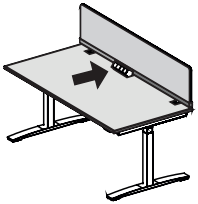

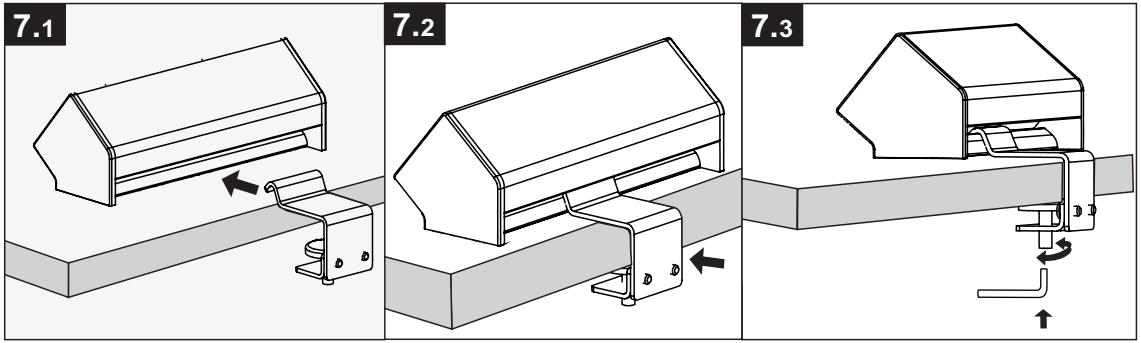
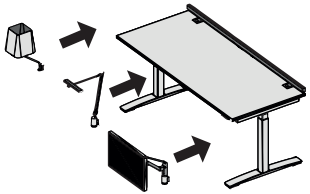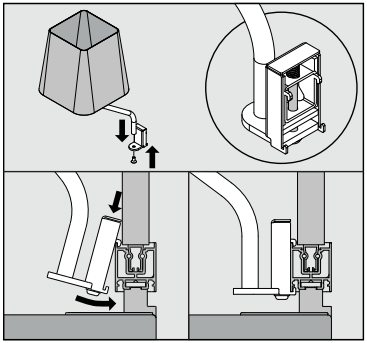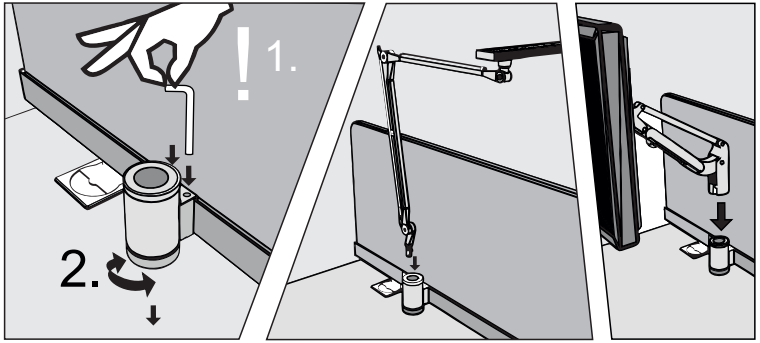
8 Lampenadapter + Monitor